XP SERIES

Incandescent Explosion-proof Fixture

DESCRIPTION: The ***XP Series*** is an incandescent explosion-proof fixture, suitable for use in chemical plants, refineries and other hazardous applications where vapors, gases and dusts are present.

XPB-14
(Bracket Mount)

XPC-34
(Ceiling Mount)

XPP-11
(Pendant Mount)

SPECIFICATIONS

Housing: Cast aluminum housing with gray polyester powder coat paint finish.

Wattage: Accepts all incandescent lamps up to 300W PS-25. Lamp not included. (See chart on page 2)

Factory Sealed: Allows for easy installation. Wiring inspection hole allows for easy access to splice compartment. Fixture is relamped with convenient single thumb screw release.

Globe: Heat and impact resistant clear prismatic glass globe standard.

Guard: Fixture can be ordered with or without die cast aluminum protective guard.

Socket: Medium base glazed porcelain socket. Heavy gauge nickel plated copper components with spring loaded center contact.

Mounting: Versatile mounting options include bracket, ceiling, or pendant. Rigid conduit required for grounding continuity.

Hub Size: 1/2" or 3/4" size for pendant, ceiling, and bracket mounts. See page 4 for details.

Accessories: Dome or 30º angle aluminum reflector available with reflective white acrylic finish.

Hanger Boxes: Cast boxes available for pendant mounted fixtures. See page 4 for details.

PHOENIX®

PHOENIX®
Durability by Design
8711 West Port Avenue • Milwaukee, WI 53224 USA • Phone: 414.973.3300 Fax: 414.973.3210
www.phoenixproducts.com

COMPLIANCES

UL 844 Listed Hazardous Location
Class I, Division 1 & 2 / Groups C & D (300W max)
Class I, Division 1 & 2 / Group D - Paint Spray Listed (up to 75W)
Class II, Division 1 & 2 / Groups E, F & G (150W max)
Class III (150W max)

UL Listings

Location		UL Listed Maximum Wattage			Operating Temperature Code
Class, Division	Groups	Without Reflector	With Std. Dome Reflector	With 30° angle reflector	
I, 1 & 2	C & D	300	300	300	T3C
I, 1 & 2	D Paint Spray	75	--	--	T4A
II, 1 & 2	E & F	200	150	200	T3
II, 1 & 2	E, F & G	100	--	150	T3C
III	--	100	100	150	T3C

WEIGHTS AND DIMENSIONS

XP-Pendant Mount

w/guard		w/o guard	
lb	kg	lb	kg
12	5.4	11	5

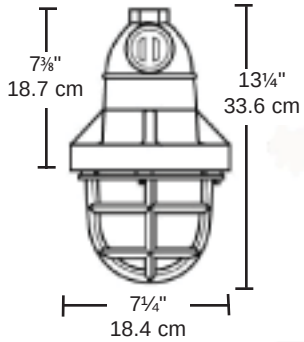

XP-Bracket Mount

w/guard		w/o guard	
lb	kg	lb	kg
15	6.8	14	6.4

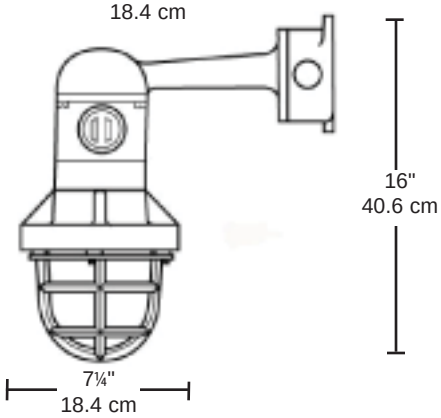

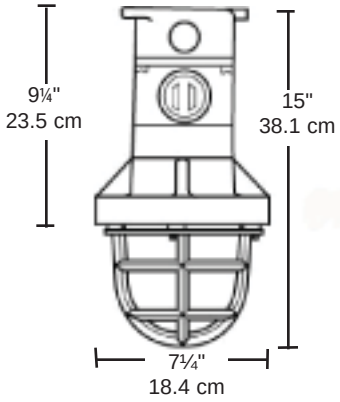

XP-Ceiling Mount

w/guard		w/o guard	
lb	kg	lb	kg
12	5.4	11	5

PHOENIX®

PHOENIX® Durability by Design
8711 West Port Avenue • Milwaukee, WI 53224 USA • Phone: 414.973.3300 Fax: 414.973.3210
www.phoenixproducts.com

PHOTOMETRICS

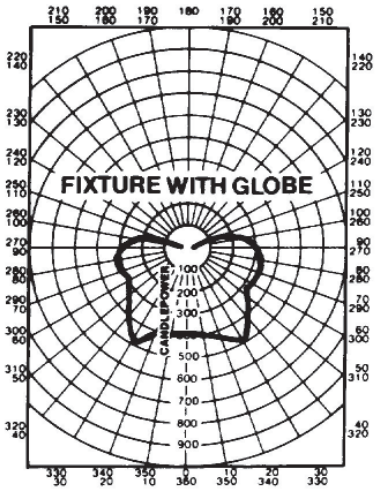

Coefficient of Utilization

Fixture with Globe - 200W A-25 INC.

% Ceiling Reflection	80			50			10		
% Wall Reflection	50	30	10	50	30	10	50	30	10
1	0.72	0.67	0.63	0.62	0.58	0.55	0.50	0.48	0.46
2	0.61	0.54	0.48	0.53	0.48	0.43	0.43	0.40	0.37
3	0.53	0.46	0.41	0.46	0.41	0.36	0.37	0.34	0.31
4	0.47	0.39	0.34	0.40	0.35	0.30	0.33	0.29	0.25
5	0.41	0.34	0.29	0.36	0.30	0.26	0.29	0.25	0.22
6	0.37	0.30	0.25	0.32	0.27	0.22	0.27	0.23	0.19
7	0.33	0.26	0.22	0.29	0.23	0.20	0.24	0.20	0.17
8	0.30	0.23	0.19	0.26	0.21	0.17	0.22	0.18	0.15
9	0.28	0.21	0.17	0.24	0.19	0.15	0.20	0.16	0.13
10	0.24	0.18	0.14	0.22	0.16	0.13	0.18	0.14	0.11

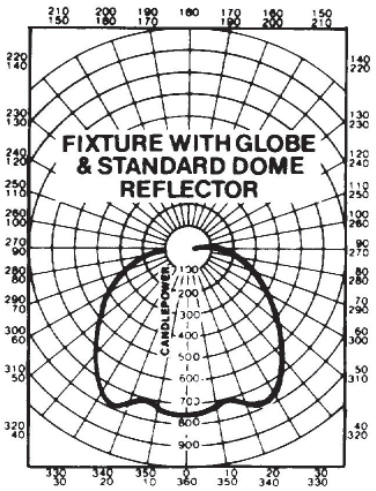

Coefficient of Utilization

Fixture with Globe and Standard Dome Reflector
200W A-25 INC.

% Ceiling Reflection	80			50			10		
% Wall Reflection	50	30	10	50	30	10	50	30	10
1	0.71	0.68	0.66	0.67	0.65	0.63	0.62	0.60	0.59
2	0.63	0.59	0.55	0.59	0.56	0.53	0.55	0.52	0.51
3	0.56	0.51	0.47	0.53	0.49	0.46	0.49	0.47	0.44
4	0.50	0.44	0.40	0.47	0.42	0.39	0.44	0.41	0.38
5	0.44	0.38	0.34	0.42	0.37	0.34	0.40	0.36	0.33
6	0.40	0.34	0.30	0.38	0.33	0.30	0.36	0.32	0.29
7	0.36	0.30	0.27	0.35	0.29	0.26	0.33	0.29	0.26
8	0.33	0.27	0.23	0.31	0.26	0.23	0.30	0.26	0.23
9	0.30	0.24	0.21	0.29	0.24	0.21	0.27	0.23	0.20
10	0.26	0.21	0.17	0.25	0.20	0.17	0.24	0.20	0.17

ACCESSORIES

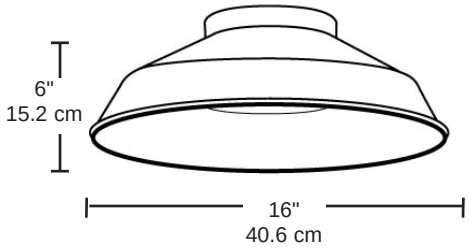

Standard Dome Reflector

Dome reflector directs light down. Heavy gauge aluminum with reflective white epoxy powder coat finish. Installs in field with 4 screws.
(Not for use with XP-bracket mount fixtures)

ORDER: REFDM

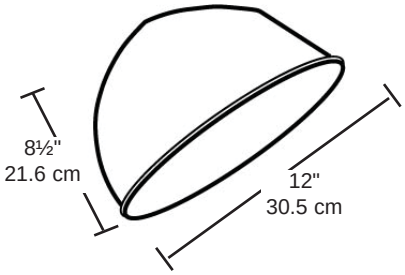

30° Angle Reflector

Angle reflector controls light down and to the side 30°. Heavy gauge aluminum with reflective white epoxy powder coat finish. Installs in field with 4 screws.

ORDER: REF30

PHOENIX®

PHOENIX®
Durability by Design
8711 West Port Avenue • Milwaukee, WI 53224 USA • Phone: 414.973.3300 Fax: 414.973.3210
www.phoenixproducts.com

ORDERING INFORMATION - FIXTURE

	SERIES	MOUNT	-	HUB SIZE	HUBS	-	OPTIONS
				OPTIONS			
example:	XP	B	—	1	4	—	
	XP	B C P		1 3	1 4 8		NG

MOUNT
B = Bracket
C = Ceiling
P = Pendant

HUB SIZE
1 = ½" (bracket, ceiling, pendant mounts **only**)
3 = ¾" (bracket, ceiling, pendant mounts **only**)

HUBS
1 = 1 Hub (bracket mount **only**)
4 = 4 Hubs (bracket and ceiling mounts **only**)
8 = 8 Hubs (bracket and ceiling mounts **only**)

OPTIONS
NG = No Guard

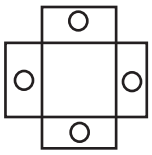

4-Hub configuration

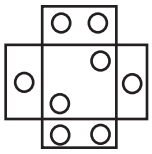

8-Hub configuration

EXPLOSION-PROOF BOX SPECIFICATIONS

Box: Cast aluminum box with 20 cubic inch capacity. Four 1/4"-20 screws fasten cover to box. Gray finish matches fixture.

Close-up Plugs: Aluminum slotted plugs with 6 full threads. One provided for each box hole.

Sizes: 4 or 8 hole boxes with blank, 1/2" or 3/4" tapped covers. See illustrations for details.

UL Listed: Listed for Class 1, Division 1 & 2, Group C & D

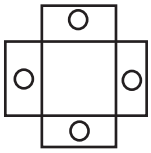

4-Hub configuration

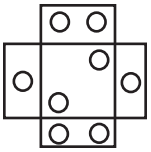

8-Hub configuration

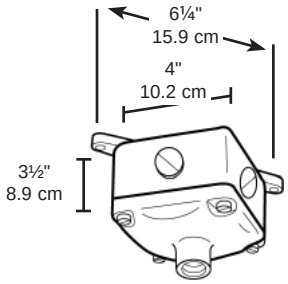

4 Hub Box

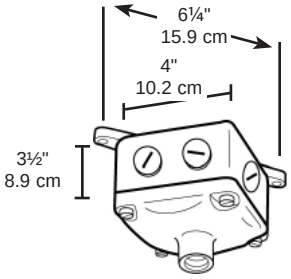

8 Hub Box

ORDERING INFORMATION - HANGER BOX

	SERIES	-	HUBS	COVER	HUB SIZE
			OPTIONS		
example:	EBX	—	4	1	1
	EBX		4 8	0 1 3	1 3

HUBS
4 = 4 Hubs
8 = 8 Hubs

COVER TYPE
0 = Blank
1 = One ½" hub
2 = One ¾" hub

HUB SIZE
1 = ½"
3 = ¾"

N5610427C

PHOENIX®

PHOENIX® Durability by Design
8711 West Port Avenue • Milwaukee, WI 53224 USA • Phone: 414.973.3300 Fax: 414.973.3210
www.phoenixproducts.com